University of Asia Pacific

Department of Computer Science and Engineering

CSE 438: Robotics Lab

LAB REPORT

Experiment Number: 06

Experiment Title: Internet of things-based floor cleaning robot

Submitted by:

Team Name : BOD

Name : H. M. Tahsin Sheikh

Student ID : 22201243

Section : E1

Submitted to:

A S Zaforullah Momtaz
Assistant Professor,
Department of Computer Science and Engineering

Date of Submission: 25/03/2026

1. Experiment Name

Internet of things-based floor cleaning robot

2. Objective

The main objectives of the Internet of Things (IoT) based floor cleaning robot are:

- To design and develop a smart floor-cleaning robot using IoT technology.
- To control the robot remotely using a smartphone through Wi-Fi.
- To automate floor cleaning using rotating mops and motors.
- To detect obstacles using sensors and avoid collisions.
- To reduce human effort in daily cleaning tasks.
- To provide an efficient and low-cost cleaning solution for homes and offices.

IoT-based floor cleaning robots aim to automate household cleaning tasks and allow users to control the robot remotely using smartphone applications.

3. Apparatus / Hardware & Software Requirements

Hardware Requirements

- NodeMCU ESP8266 (Wi-Fi microcontroller)
- Motor Driver Module (L298N)
- DC Gear Motors (2 or 4)
- Robot Chassis with Wheels
- Lithium-ion Battery
- TP4056 Charging Module
- Ultrasonic Sensor (HC-SR04)
- Water Pump
- Cleaning Mop / Roller
- Relay Module
- Switch

Software Requirements

- ThinkerCad
- Arduino IDE

4. Circuit Diagram / Schematic

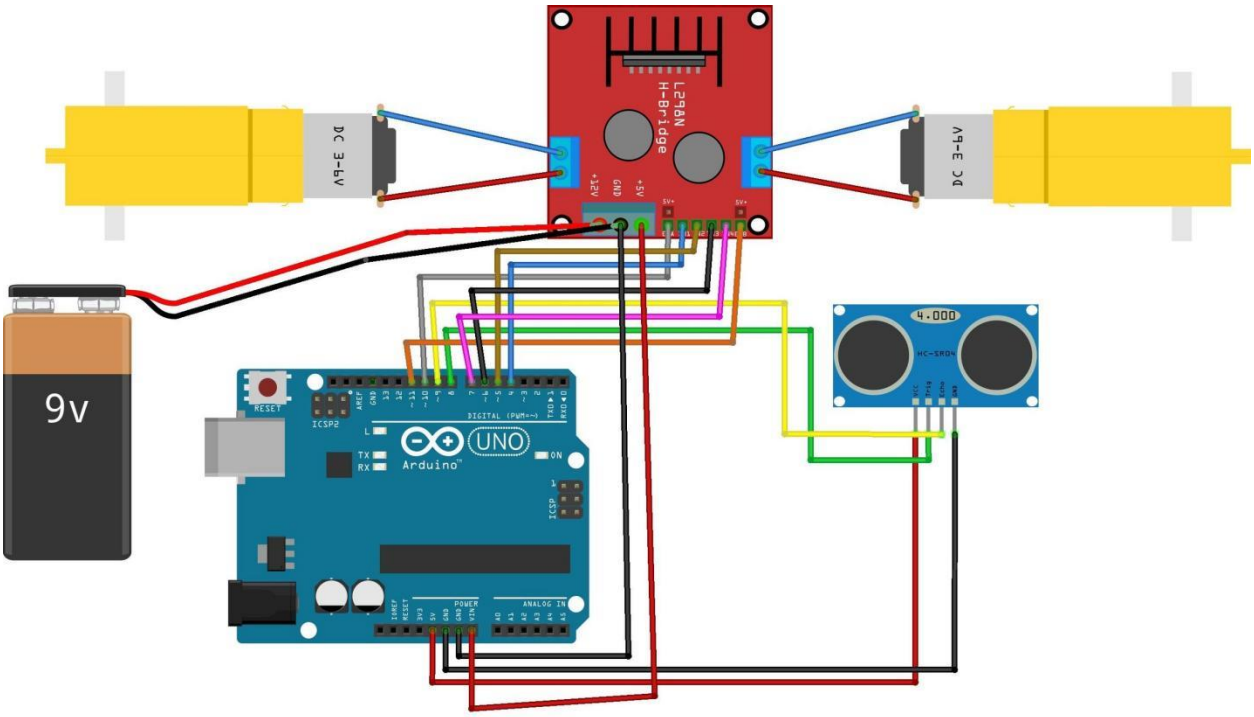

Fig:1 -Design a Internet of things-based floor cleaning robot

5. Code / Program

```
#define IN1 D1

#define IN2 D2

#define IN3 D3

#define IN4 D4
```

```
char command;
void setup() {
  pinMode(IN1, OUTPUT);
  pinMode(IN2, OUTPUT);
  pinMode(IN3, OUTPUT);
  pinMode(IN4, OUTPUT);
  Serial.begin(9600);
}

void loop() {
  if (Serial.available()) {
    command = Serial.read();
    if (command == 'F') {        // Forward
      digitalWrite(IN1, HIGH);
      digitalWrite(IN2, LOW);
      digitalWrite(IN3, HIGH);
      digitalWrite(IN4, LOW);
    }
    else if (command == 'B') {     // Backward
      digitalWrite(IN1, LOW);
      digitalWrite(IN2, HIGH);
      digitalWrite(IN3, LOW);
      digitalWrite(IN4, HIGH);
    }
    else if (command == 'L') {     // Left
      digitalWrite(IN1, LOW);
      digitalWrite(IN2, HIGH);
```

```
      digitalWrite(IN3, HIGH);
      digitalWrite(IN4, LOW);
    }

    else if (command == 'R') {     // Right
      digitalWrite(IN1, HIGH);
      digitalWrite(IN2, LOW);
      digitalWrite(IN3, LOW);
      digitalWrite(IN4, HIGH);
    }

    else if (command == 'S') {     // Stop
      digitalWrite(IN1, LOW);
      digitalWrite(IN2, LOW);
      digitalWrite(IN3, LOW);
      digitalWrite(IN4, LOW);
    }
  }
}
```

6. Output / Observations

After assembling and programming the system, the following observations were recorded:

- The robot connected successfully to the Wi-Fi network.
- Commands from the smartphone were received correctly.
- The robot moved in different directions according to commands.
- The ultrasonic sensor detected obstacles and prevented collisions.
- The water pump sprayed water during cleaning.
- The mop rotated and removed dust from the floor.
- The battery provided sufficient power for continuous operation.

Experimental testing showed effective cleaning performance and reliable communication between smartphone and robot.

6. Result

The IoT-based floor cleaning robot was successfully designed and implemented.

The robot responded accurately to commands from the smartphone and performed cleaning operations effectively. The integration of sensors improved safety by avoiding obstacles, and Wi-Fi connectivity enabled remote control and monitoring.

Testing confirmed that the robot provides efficient cleaning while reducing manual effort.

8. Conclusion

The Internet of Things (IoT) based floor cleaning robot demonstrates how smart technology can automate household cleaning tasks. The integration of NodeMCU ESP8266, sensors, motors, and IoT communication enables remote control and efficient floor cleaning.

This project reduces human workload and improves cleaning efficiency. Future improvements may include:

- Automatic navigation
- Smart path planning
- Camera-based monitoring
- AI-based dirt detection

Such systems have strong potential for use in homes, hospitals, offices, and commercial environments.